BRAC UNIVERSITY Inspiring Excellence	**BRAC University** **Department of Computer Science and Engineering** Semester: **Spring 2025** Course Code: **CSE460** Course Title: **VLSI Design**	**Midterm Examination** Full Marks: **10 x 2 + 15 = 35** Time: **1 hour 20 minutes** Date: **18 March 2025**

Set B

Student ID:	**Name:**	**Section:**

[Answer all **THREE** questions. Return the question paper with the answer script.]

1. (CO2) Drek and Simon are playing *Scale Wars*, a competitive game where each controls a powerful dragon—Drek's *Drogon* and Simon's *Rhaegal*. The goal is to level up their dragon by achieving consecutive wins. In each match, the outcomes are as follows: if Drek wins, a=1,b=0; if Simon wins, a=0,b=1; if both dragons collapse simultaneously, a=1,b=1; and if the game crashes suddenly (a rare event), a=0,b=0. *Rhaegal* triggers z1=1 and can level up only if it wins two consecutive times. Additionally, overlapping wins are **not counted** for *Rhaegal*. For example, if *Rhaegal* wins three consecutive rounds, only one level-up is triggered for the first two wins. Another level-up requires two additional consecutive wins. If *Drogon* wins only once, since it is a legendary dragon, it triggers z2=1 & levels up. An example is shown in the table below:

	1	2	3	4	5	6	7	8	9	10	11	12	13	14	15
a	0	1	1	1	0	0	0	0	1	1	0	0	1	1	0
b	0	0	0	0	1	1	1	1	1	0	1	0	1	1	1
z1	0	0	0	0	0	0	**1**	0	**1**	0	0	0	0	0	0
z2	0	0	**1**	**1**	**1**	0	0	0	0	0	**1**	0	0	0	0

(a) Determine the type of FSM that would be needed for the given problem. **1**

(b) Design the state diagram for the corresponding FSM. Note that you will have to use a maximum of **four states** in the state diagram. There will be a deduction in marks if you take more states. **3**

(c) Derive the state-assigned table using **Grey encoding** from your state diagram in (b). **3**

(d) Evaluate the outputs **z1** and **z2** for the FSM & calculate the number of flip-flops required for the circuit implementation. (You don't need to draw the circuit implementation).

3

2. (CO2) Design a Mealy-type overlapping finite state-machine with one input X and an output Z. Whenever the input sequence consists of one 1 followed by one consecutive 0 or **vice versa**, the output will be 1. Otherwise, the output will be 0.

(a) Draw the state diagram from the stem. **2**
(b) Derive the state-assigned table from the state diagram using **Binary encoding**. **4**
(c) Write down the simplified Boolean expression of the next state and output from the state-assigned table. **4**

3. (CO1) Transmission gates are used to execute different types of combinational and sequential logic circuits like below:

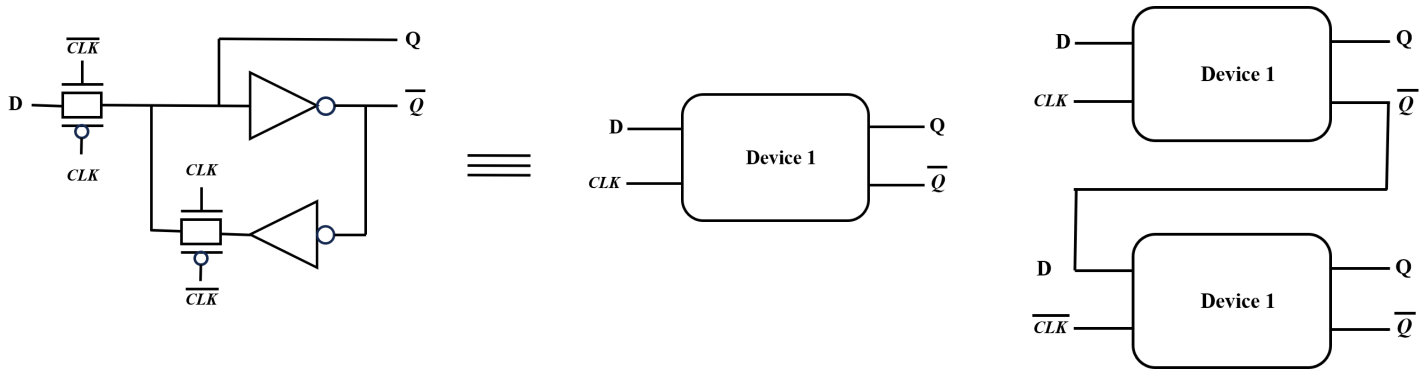

Figure 1: Circuit on the left is represented by the block **Device 1.** Circuit on the right uses this **Device 1**.

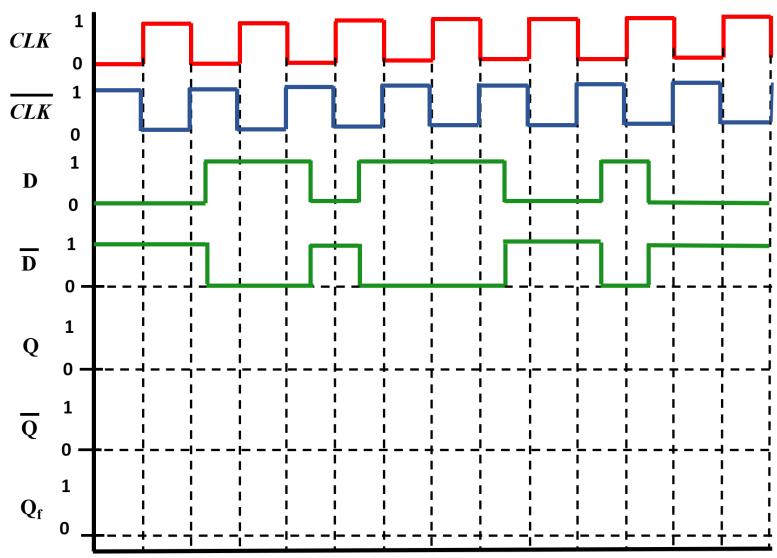

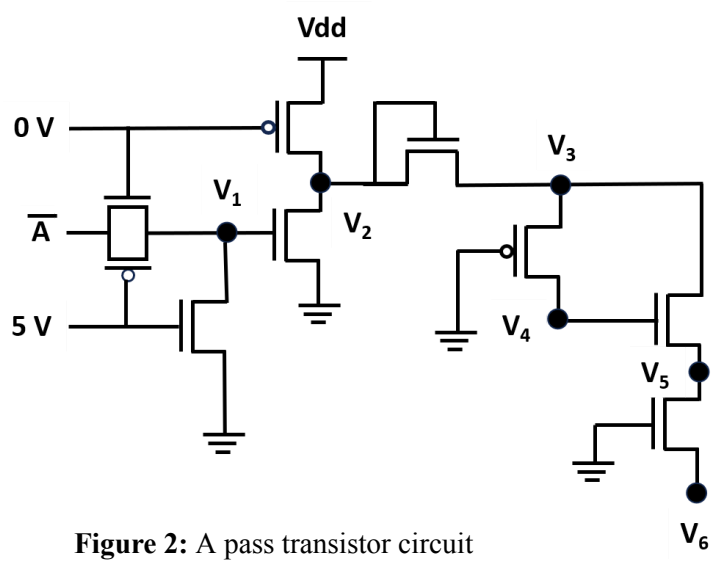

Figure 2: A pass transistor circuit

(a) **Implement** a 3-input NOR gate using a suitable MUX. **3**
(b) **Identify** Device 1 in **Fig. 1** (Negative-edge/level-triggered or positive-edge/level-triggered flip-flop/latch) with a proper **characteristic table**. **2**
(c) **Draw** the waveforms in the grid given above for the right circuit of Fig. 1. **Determine** if the circuit is a negative-edge/level-triggered or positive-edge/level-triggered flip-flop/latch? **5**
(d) For the circuit in **Fig. 2**, Vdd = 4 V and Vtn = |Vtp| = 0.2 V. Determine V1, V2, V3, V4, V5, and V6. **5**